PART No. 654733

FIRST USED ON :- LANCE S.L.F.

COMMON PART	
RESPONSIBILITY	DENNIS
COPY TO	USA
COPY TO	
COPY TO	

BENDIX

NON-RETURN VALVE

BENDIX PT No. KW 4455/1

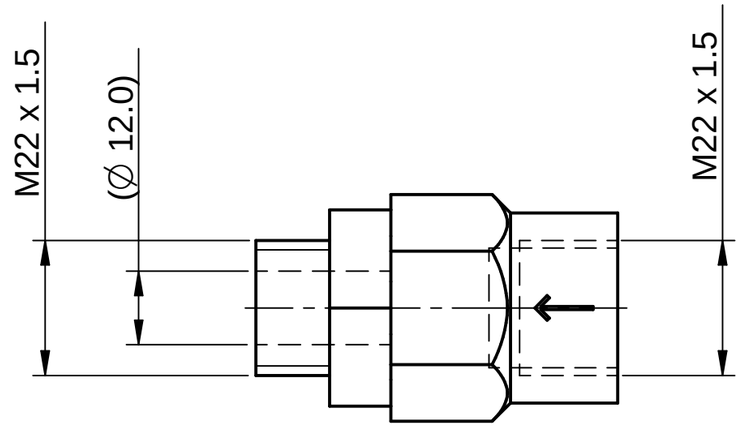

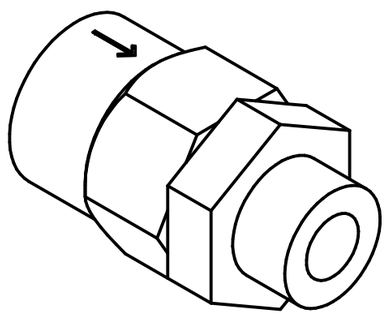

B	342/14
A	1083/93
1	ISSUED
REV	ALT NO.

DRAWING TO: BS308 ENGINEERING DRAWING PRACTICE.
BS499 WELDING TERMS & SYMBOLS.
ALL DIMENSIONS IN mm UNLESS OTHERWISE STATED.
MACHINING SYMBOL ✓ SURFACE FINISH IN um.
TOLERANCES UNLESS OTHERWISE STATED TO BE:-
MACHINING ± 0.25mm. CENTRE DISTANCE ± 0.25mm ANGLES ± 0°30".
FABRICATION:-
UP TO 600mm ± 0.75mm. OVER 600mm ± 1.5mm. ANGLES ± 1°.
SCREW THREADS TO B.S.I. MEDIUM FIT.
REMOVE ALL BURRS AND SHARP EDGES.

THIS DRAWING IS THE PROPERTY AND COPYRIGHT OF DENNIS. IT MUST NOT BE REPRODUCED OR USED FOR MANUFACTURE WITHOUT THEIR WRITTEN CONSENT.

MATERIAL	
SPEC.	
HARDNESS	
ULT.TENS	
FINISH	

DENNIS
Guildford, Surrey

DRAWN	RJ	DATE	29.09.92
SCALE 1 : 1		DO NOT SCALE	

TITLE :- NON-RETURN VALVE

CAD A3

PART No. 654733